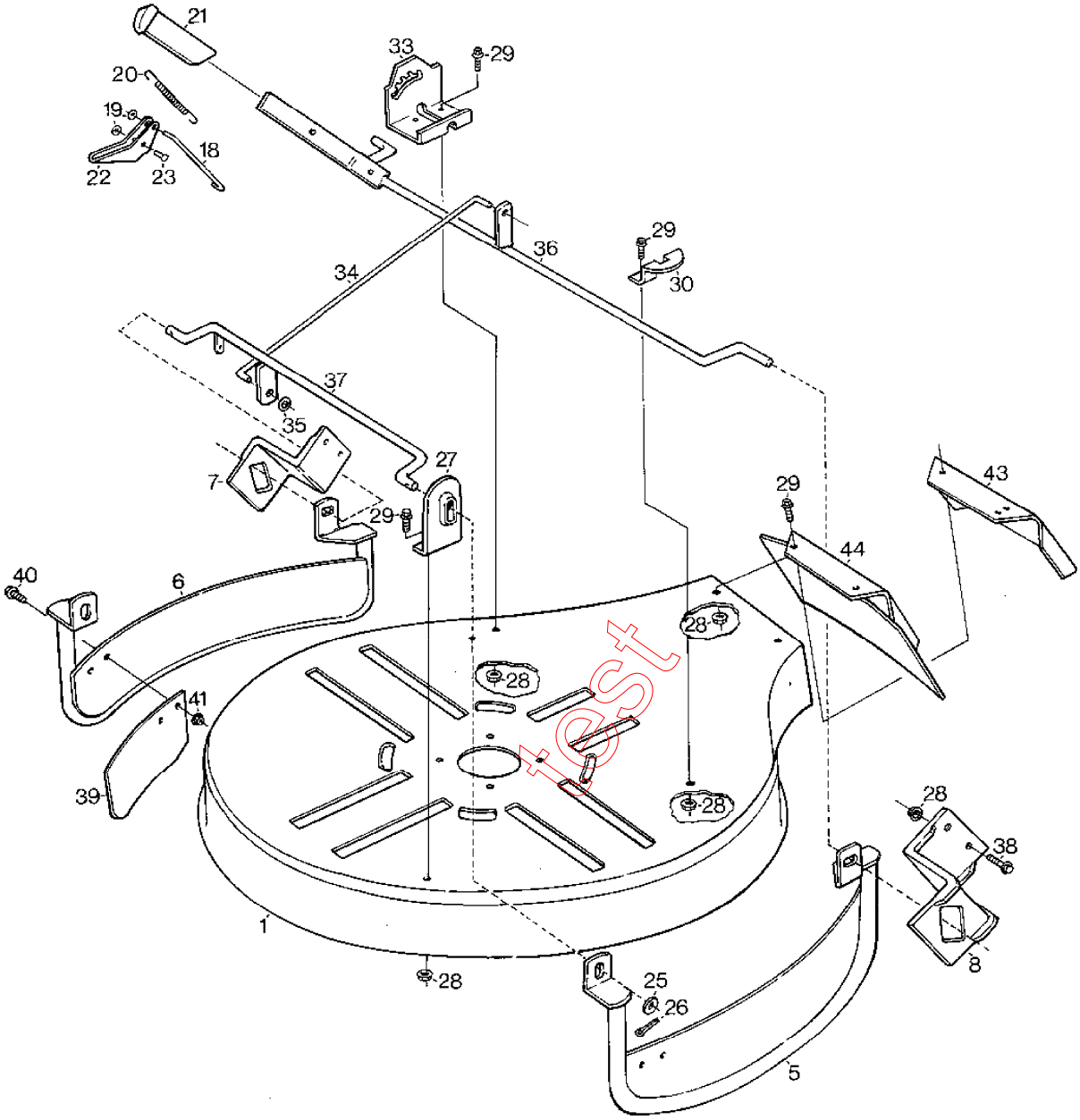
21
33
29
20
19
18
22
23
36
29
30
34
37
35
27
7
29
43
29
44
40
6
28
28
41
39
28
28
38
1
8
28
25
26
5

test

Section: GARDEN MOWER DECK CONTROLS

Pos.	Quantity	Spare part No	Description	Kit	Notes	New
	2126 2121 2136 2131 2146 2151 2156					
1	1	1134-2071-02	Casing			
5	1	1134-2929-01	Side guard-L.H.			
6	1	1134-2929-02	Side guard-R.H.			
7	1	1134-2901-02	Console-R.H.			
8	1	1134-2901-01	Console-L.H.			
18	1	1134-0343-00	Slide for height ad			
19	3	9675-0009-02	Starlock			
20	1	1134-0361-00	Spring			
21	1	1134-1069-01	Handle			
22	1	1134-1326-01	Control lug			
23	1	9646-0064-22	Rivet			
25	2	9699-0037-02	Washer			
26	2	9599-0083-02	Split pin			
27	2	1134-2076-01	Suspension plate-fr			
28	14	9739-0831-22	Nut		Finland, Tyskland	
29	8	9959-0816-16	Screw			
30	1	1134-2077-01	Suspension plate			
33	1	1134-2081-01	Plate			
34	1	1134-2096-01	Rod			
35	2	9675-0015-02	Lock washer			
36	1	1134-2097-02	Lift arm-rear			
37	1	1134-2098-01	Lift arm-front			
38	4	9959-0820-16	Screw			
39	1	1134-2161-02	Protection plate		Finland	
40	2	9959-0612-16	Screw		Finland	
41	2	9739-0631-22	Nut		Finland	
43	1	1134-2137-01	Ejection shield		Tyskland	
44	1	1134-2191-01	Discharge shield		Finland	

test